1852545
Round 4 Drawer Accent Table

Parts and Hardware List

A.	Top Assembly	1 pc
B.	Legs	4 pcs
C.	Allen Head Bolts	9 pcs
D.	Lock Washers	9 pcs
E.	Flat Washers	9 pcs
F.	Allen Head Wrench	1 pc
G.	Stretchers	2 pcs
H.	Finial	1 pc
I.	Phillips Pan Head Wood Screws	4 pcs
J.	Phillips Head Screwdriver	1 pc

* Please make sure that you have all the parts indicated before you begin assembly of this item.
* This item should be assembled on a soft surface to prevent scratching the finish during assembly.
* This item may require periodic tightening.

Hardware Illustrations

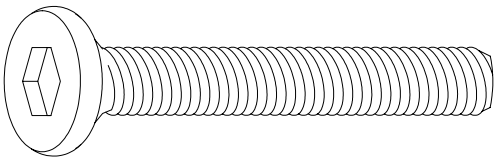

C. Allen Head Bolt.

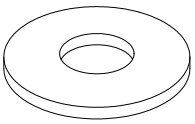

E. Flat Washer.

I. Phillips Pan Head Wood Screw.

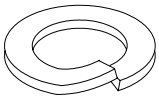

D. Lock Washer.

1852545
Round 4 Drawer Accent Table

Assemble Stretchers

Parts required

C.	Allen Head Bolt	1 pc	F.	Allen Head Wrench	1 pc
D.	Lock Washer	1 pc	G.	Stretchers	2 pcs
E.	Flat Washer	1 pc	H.	Finial	1 pc

1. **Assemble Stretchers (C)** Place the Stretchers (G) diagonally by aligning the cut-out sections in the center. Align the Finial (H) with the pre-drilled holes in the center of the Stretchers (G). From the bottom, secure the Finial (H) with the Allen Head Bolt (C), Lock Washer (D), and Flat Washer (E) using the Allen Head Wrench (F). See Illustration #1.

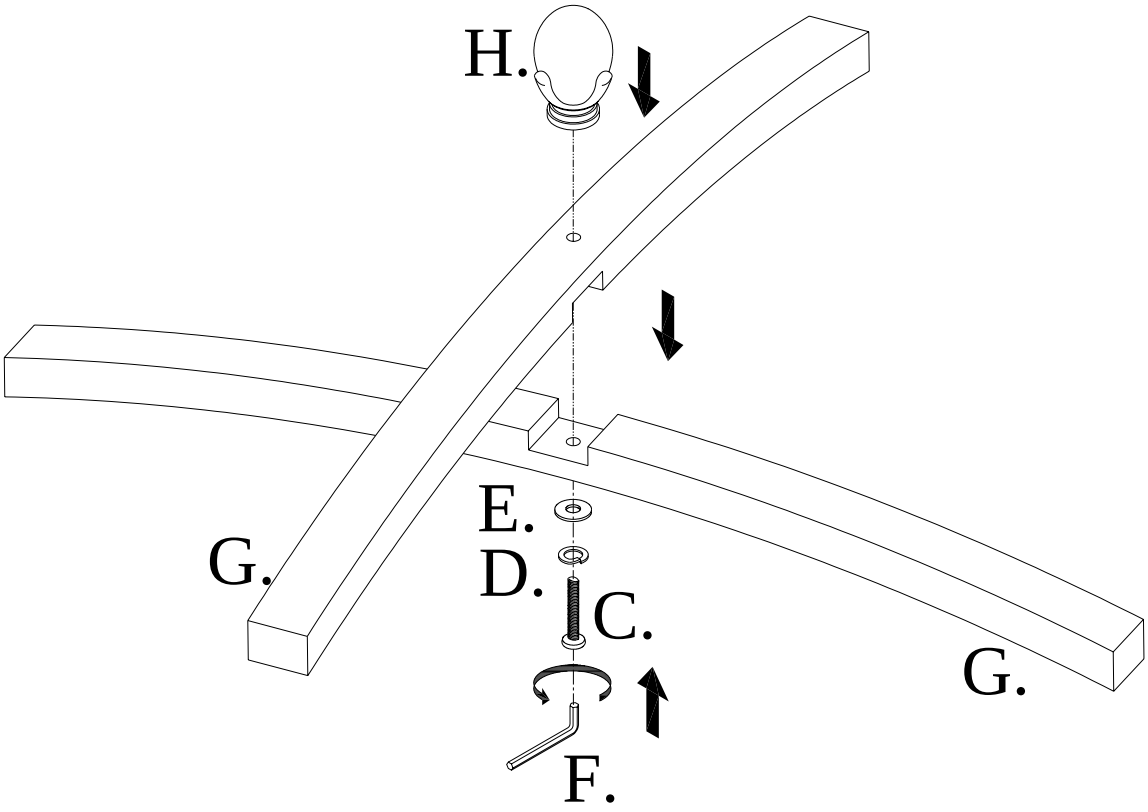

Illustration #1

1852545
Round 4 Drawer Accent Table

Attach Legs and Stretchers

Parts required

A.	Top Assembly	1 pc	F.	Allen Head Wrench	1 pc
B.	Legs	4 pcs	G.	Stretcher	2 pcs
C.	Allen Head Bolts	8 pcs	H.	Finial	1 pc
D.	Lock Washers	8 pcs	I.	Phillips Pan Head Wood Screws	4 pcs
E.	Flat Washers	8 pcs	J.	Phillips Head Screwdriver	1 pc

2. **Attach Legs (B)** Place the Top Assembly (A) upside down on a soft surface. Align the pre-threaded holes in the Legs (B) with the pre-drilled holes in the corner blocks of the Top Assembly (A). Secure in place with Allen Head Bolts (C), Lock Washers (D), and Flat Washers (E) using Allen Head Wrench (F).
   Note: Attach only 2 legs at this time. See Illustration #2.
3. **Attach Stretchers (G)** Insert the ends of the Stretchers (G), with the Finial (H) facing towards the Top Assembly (A), into the pre-cut grooves in the Legs (B). Secure in place with the Phillips Pan Head Wood Screws (I) using Phillips Head Screwdriver (J). See Illustration #2.
4. Attach the two remaining Legs (B) by repeating Steps 2 and 3. See Illustration #2.

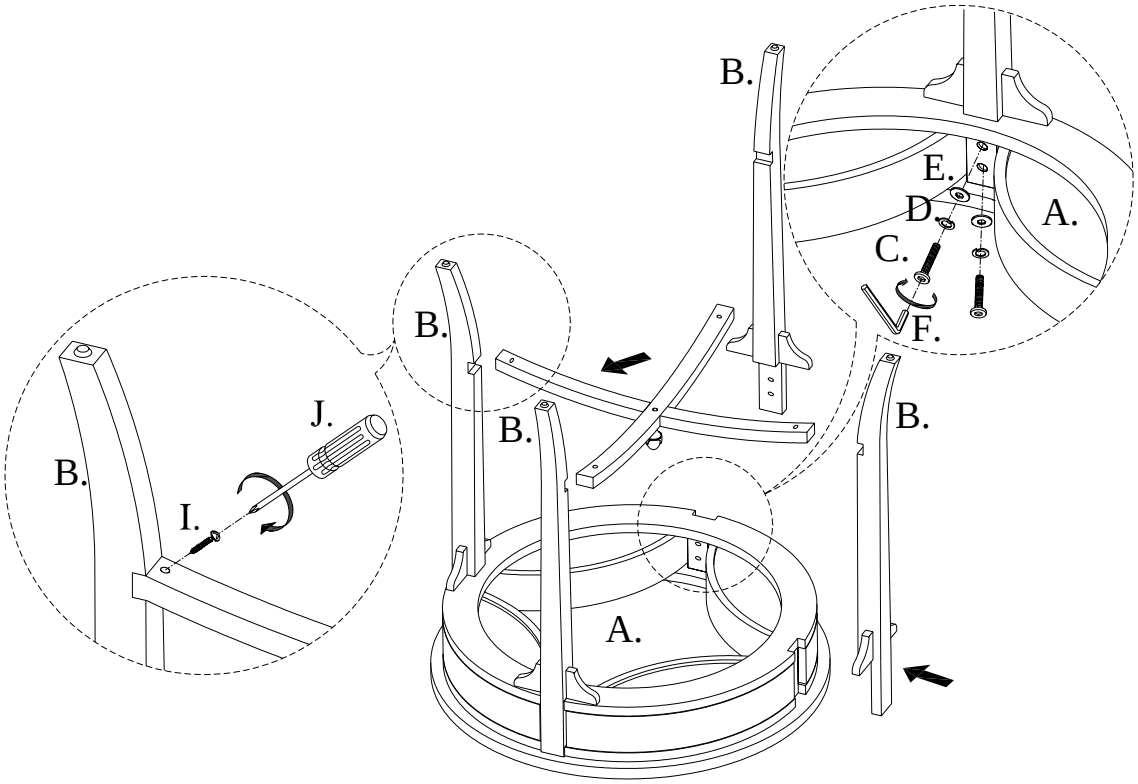

Illustration #2